DATABASE MANAGEMENT SYSTEM PROJECT

TITLE: RESORT MANAGEMENT SYSTEM

PRESENTED BY:

Minaal Fatima 0112-BSCS-23

Rubab Zahra 0111-BSCS-23

SUBMITTED TO: Sir Muhammad Hafeez

1. History of Organization.

LandNest Ventures bought land in 2024 to build a resort named **"M & R Resort"**, completed in mid-2025. To manage operations, they decided to develop a **Resort Management Database** to store all essential data.

2.Problems and Constraints

The resort faced data consistency issues, such as assigning the **same room to multiple guests**. To prevent this, **SQL constraints** were applied:

- NOT NULL – ensures required fields aren't empty
- UNIQUE – ensures all values in a column are distinct
- PRIMARY KEY – uniquely identifies each record
- FOREIGN KEY – maintains referential integrity between related tables

2. Define Objectives

The goal is to:

- Record all **employees** (current and past)
- Manage **login accounts** for employees
- Track **inventory and suppliers**
- Store detailed **guest information**
- Record **restaurant food items and menus**
- Track **resort expenses** and **guest bills**
- Provide **parking details**, **room reservations**, and **services used**.

3. Scenario

Consider a Resort that has many rooms. Rooms can be reserved by many guests at different times. Many guests arrive in the hotel to stay. Guests can reserve rooms and employees serve different services to the guests. For employees, the hotel keeps Employee ID, first name, last name, salary, and address which has city, country, house no, street no, area. For the guest, it keeps the Guest ID, CNIC, first name, last name, phone number, email, driving license, gender, and address which has city, country, house no, street no, area. The contact information of employees can have more than one phone number. For different services, it keeps the service ID, service name, service cost. An employee may serve many services and a guest may be served many services from the employees. A service is served by many employees and a service is served to many guests. For rooms, the resort keeps the room ID and room location. A room has a room type and a room status. One room can have only one room status at a time and one room belongs to only one room type. Many rooms can have the same room type and many

rooms can have the same status at a time. For room status, the resort keeps the room status ID and room status. For the room type, the resort keeps the room type ID, room type name, rates, and capacity. Guests park their vehicles in the parking area. The parking area contains vehicle types. For the parking area, the resort keeps the parking ID and parking status. For vehicle types, the resort keeps the vehicle type ID and vehicle type name. Guests may not use the parking facility or they may park many cars. There are many vehicles of different vehicle types parked in the parking area at one time. Guests order food items from the kitchen. They may order many food items or they may not order any food item, and one food item is ordered by many guests and one food item may not be ordered by any guest. Guests pay reservation bills. For reservation bills, the resort keeps the reservation bill ID, payment amount, and payment date. For every reservation, one guest must pay the reservation bill or a guest may pay many reservation bills. Every reservation bill has a payment type. One reservation bill has only one payment type and one payment type may belong to many reservation bills. For payment type, the resort keeps the payment type ID and payment type name. The bank has a bank account. For the bank, the resort keeps the bank ID, name, and in the address it saves the city, country, house no, street no, area. For the bank account, the resort keeps the bank account ID and balance. The bank account collects the reservation bill. One bank account may collect many reservation bills and one reservation bill is stored in only one bank account. The bank account pays the resort expenses. For resort expenses, the resort keeps the expense ID, expense name, expense cost, description, and payment date. One bank account pays many resort expenses and all the resort expenses are paid from only one bank account. An employee in the resort has an employee type. For employee type, the resort keeps the employee type ID, designation, min salary, and max salary. One employee can have only one employee type and an employee type may belong to many employees. An employee may or may not have a login. One login is assigned to one employee and one employee is assigned only one login. For login, the resort keeps login ID, username, and password. For job history, the resort keeps the start date and end date. An employee has job history. One job history may belong to many employees, but one employee can have only one job history. An employee creates food menus and an employee prepares the food items. One employee prepares many food menus and one food menu is prepared by only one employee. One employee may prepare many food items and one food item can be prepared by many employees. A food menu can have many food items and a food item may be present in many food menus. For food items, the resort keeps food item ID, food item name, description, per item price, and quantity available. For food menu, the resort keeps food menu ID. Employees manage the inventory and the godown. One employee manages all the inventories and all the godowns, and all the inventories and godowns are managed by only one employee. For inventory, the resort keeps inventory ID, inventory name, and quantity, and for the godown, the resort keeps the godown ID and godown name. Inventory contains products. For products, the resort keeps the product ID, product name, barcode, and description. One inventory may contain many products and one product is present in many inventories. A supplier provides the products. A supplier may provide many products and one product is provided by many suppliers. For suppliers, the resort keeps the supplier ID, supplier name, registration number, CNIC, and for address it saves city, country, house no, street no, area. A supplier provides shipments. One supplier may provide many shipments and one shipment is provided by only one supplier. For shipment, the resort keeps

the shipment number, shipment date, serial number, and for address it saves city, country, house no, street no, area.

Noun verb analysis

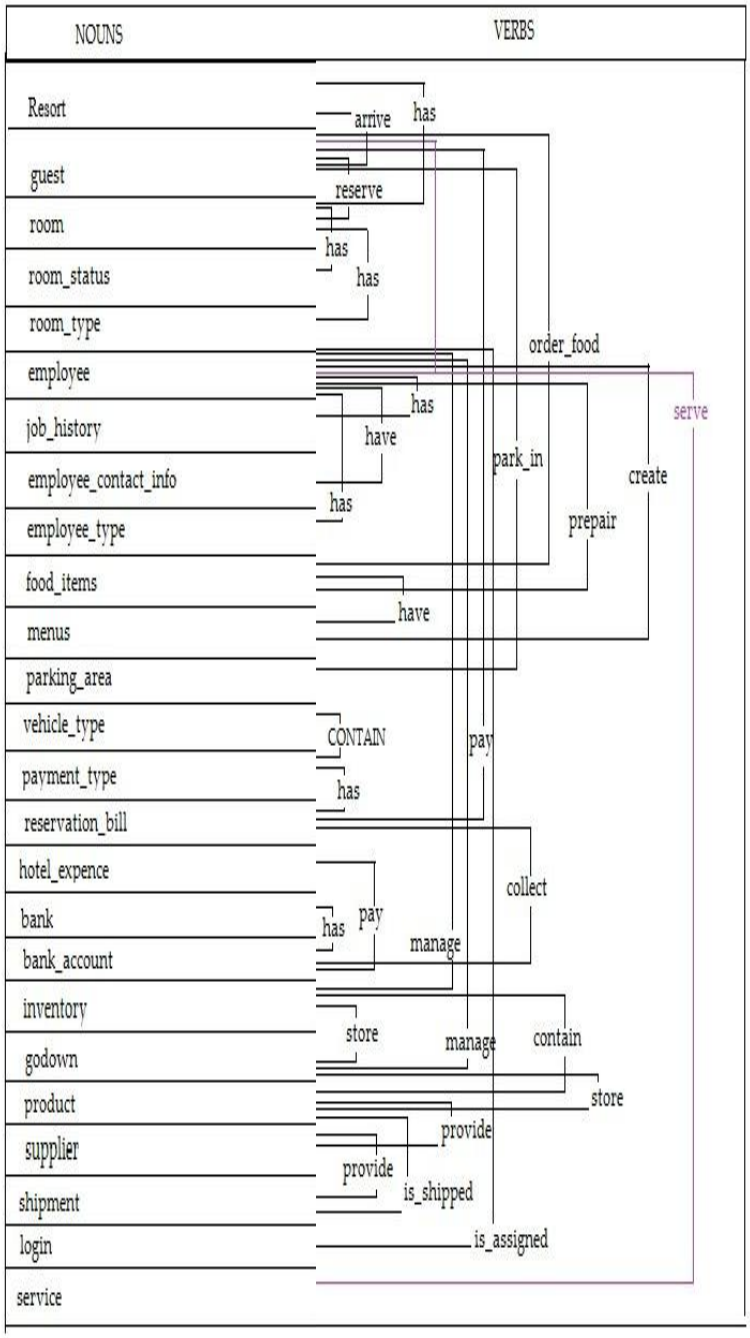

Abnormal ERD

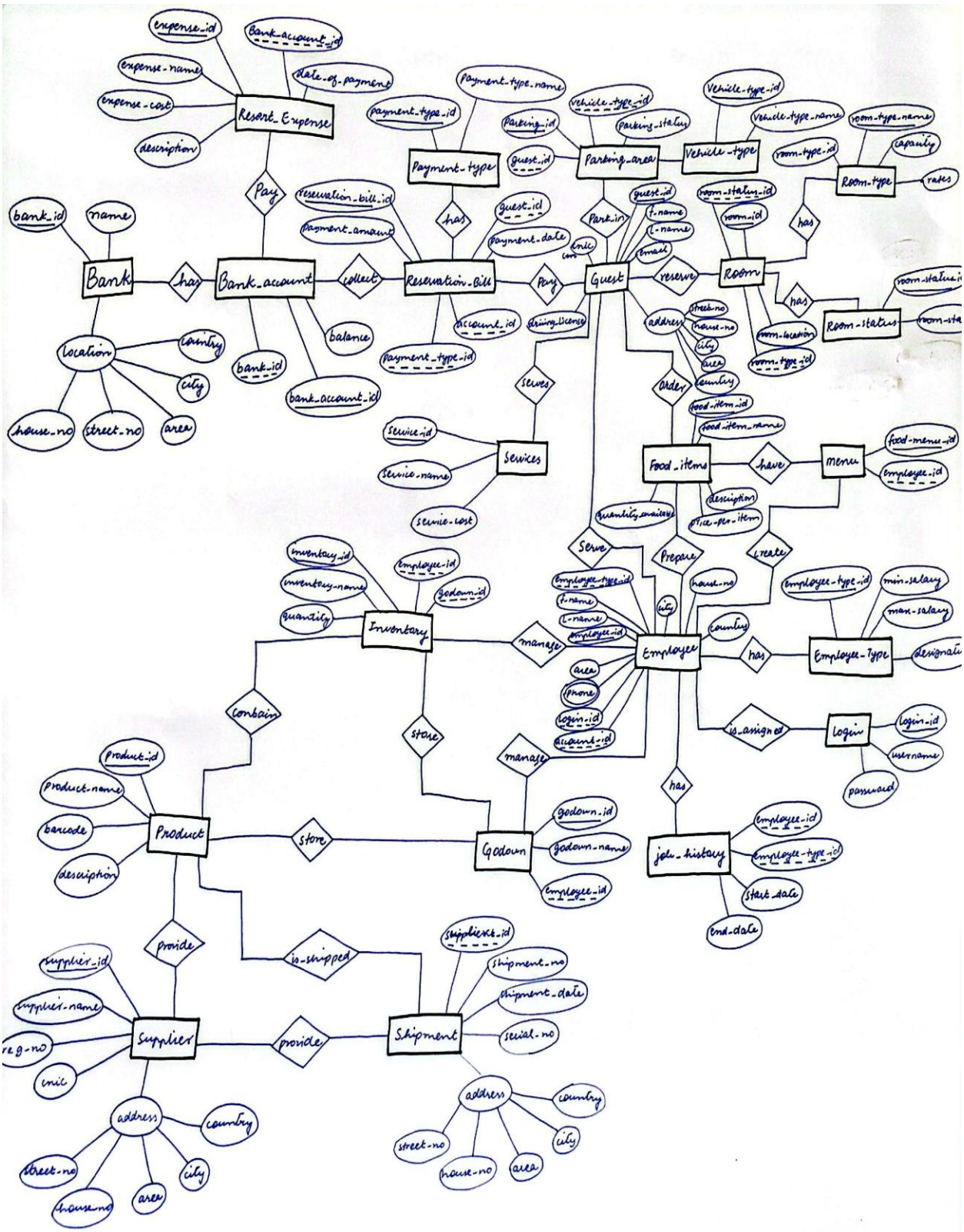
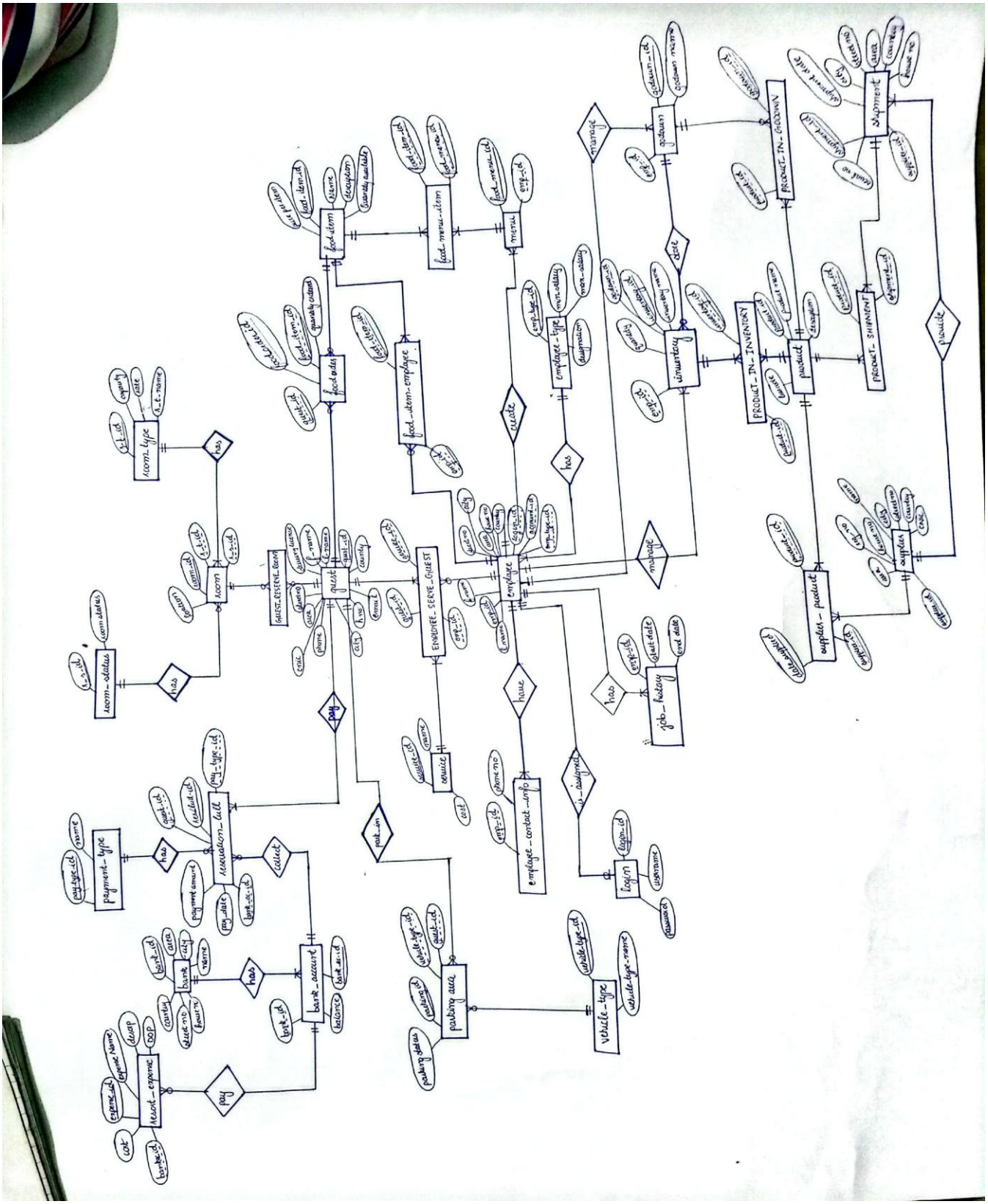
Normalized ERD